Using Low-Cost COTS Spectrum Analyzers & Software Defined Radios (SDR) for Phase Cal and RFI Monitoring

Tom Clark
NASA Goddard/NVI
k3io@verizon.net

IVS TOW @ Haystack Observatory -- May 6-9 2013

In VLBI, Spectrum Analyzers are used to:

- Detect & Directly Identify sources of external RFI
  - Normally VLBI stations rely on commercial microwave spectrum Analyzers covering 1-20+ GHz and costing $10,000 - $50,000
- Detect & Identify local sources of RFI at IF (DC-3 GHz)
- Monitoring Phase Cal performance

- Today I'll discuss Low-cost (<$2500) COTS (Commercial, Off The Shelf) Spectrum Analyzers and SDRs (Software Defined Radios)
- By picking a $2500 price limit, I intentionally focus on modern hardware available to radio amateurs ("hams").

First of all – BRAND NEW!!!

A Low Cost "*real*" 0-1.5 GHz Spectrum Analyzer, the RIGOL DSA815TG

- **Price $1495 (USA) ! ! !**
- 9 kHz to 1.5 GHz Frequency Range
- Typical -135 dBm Displayed Average Noise Level (DANL)
- -80 dBc/Hz @10 kHz offset Phase Noise
- Total Amplitude Uncertainty <1.5 dB

- 100 Hz Min & 1 MHz Max Resolution Bandwidth (RBW)
- Standard with Preamplifier and AM/FM Demodulation Function
- 1.5 GHz Tracking Generator, 10 MHz Frequency Reference (in/out)
- 8 inch (800×480 pixels) high-definition display with clear & easy to use GUI
- Complete connectivity with standard interfaces: LAN, USB Host & USB Device
- Compact size, light weight 4.25kg (9.4lbs)

This unit and many others described in this talk are on display in the Library

Software Defined Radios (SDR)

- Many of VLBI's needs are well matched to a new generation of SDRs being developed by Radio Amateurs (and by the Intelligence Community for identification of signals)
- Heavy emphasis on Open Source & Public Domain software and hardware comes from the, world and is quite serviceable for use in VLBI (No need to write software, but a good jumping-off platform if you want to add or modify features)
- A major portion of these SDRs is implemented in in FPGAs and/or in software running cheap PCs

In the Mark-3/4 world we monitored Phase Cal & RFI Signals in the final baseband ("video") IF

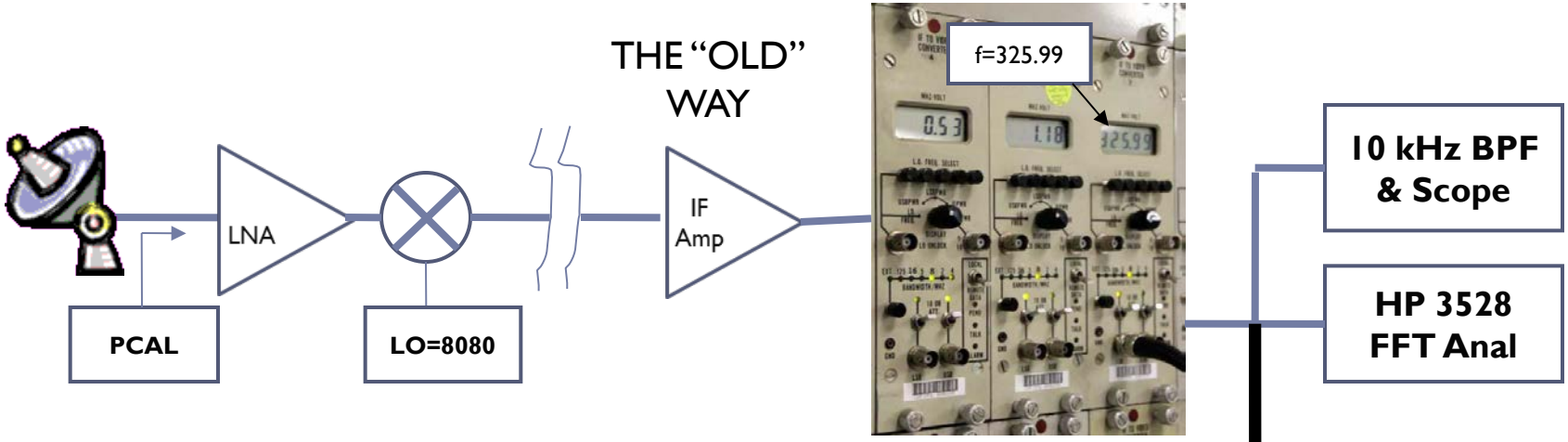

THE "NEW" WAY with $500 SDR and a small Netbook PC

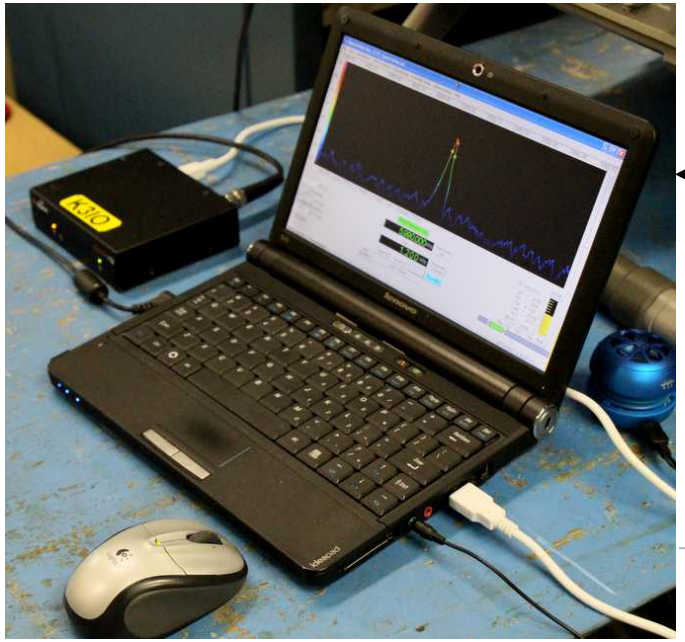

10, 1010,2010.... kHz USB
or
990,1990, 2990....kHz LSB
with
50+ dB Dynamic Range

Here we use a $500 SDR-IQ to view the Mk-4 Phase Cal signal @ 8080 + 325.990 – 5.990(LSB) = 8400.000 MHz

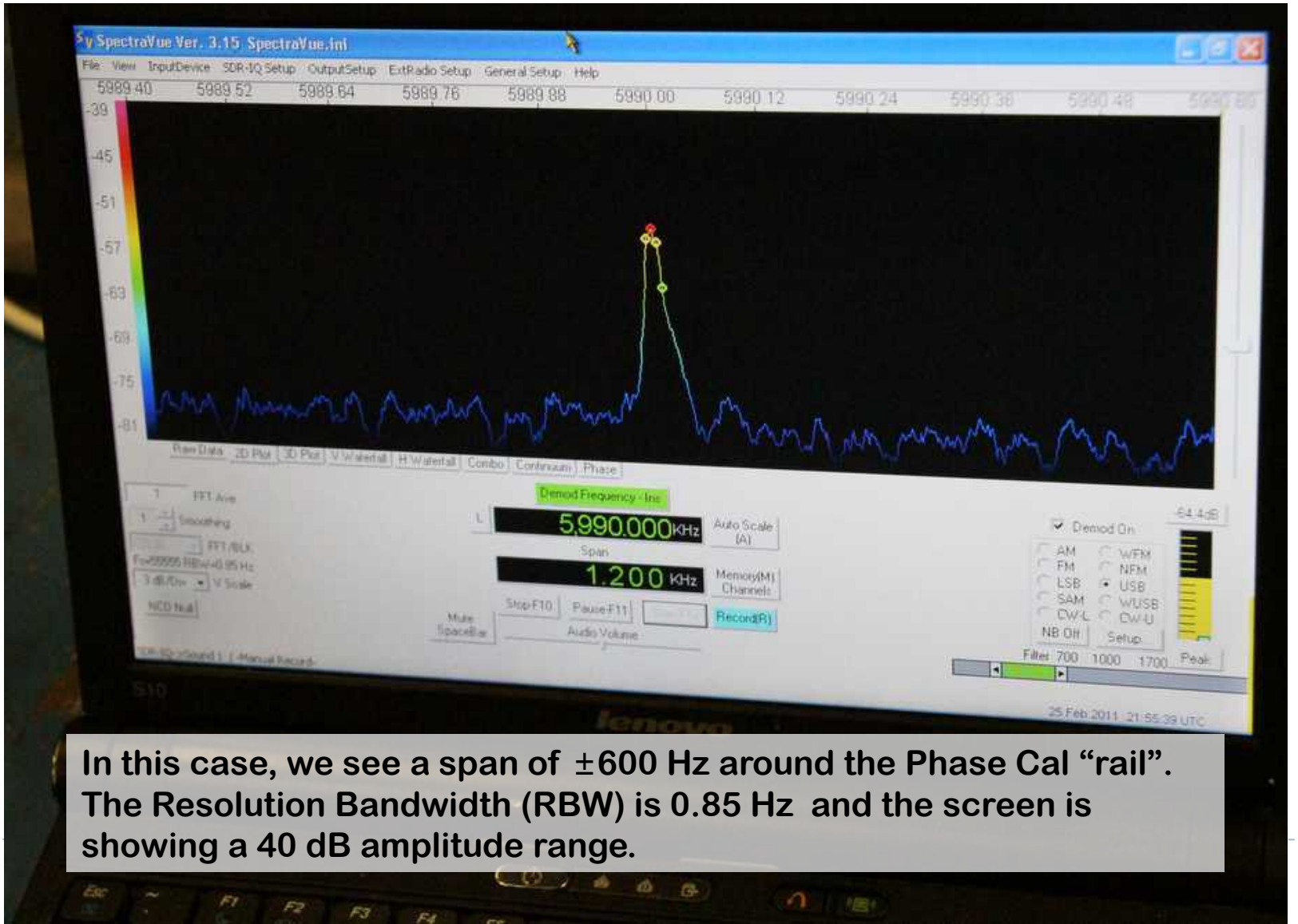

In this case, we see a span of ±600 Hz around the Phase Cal "rail". The Resolution Bandwidth (RBW) is 0.85 Hz and the screen is showing a 40 dB amplitude range.

In the new Mark-5/6 Digital Backend, the analog Video Converter function becomes Digital.

The equivalent of the VC's USB/LSB BNC jacks exist only in the digital backend's Xilinx FPGA (until now!)

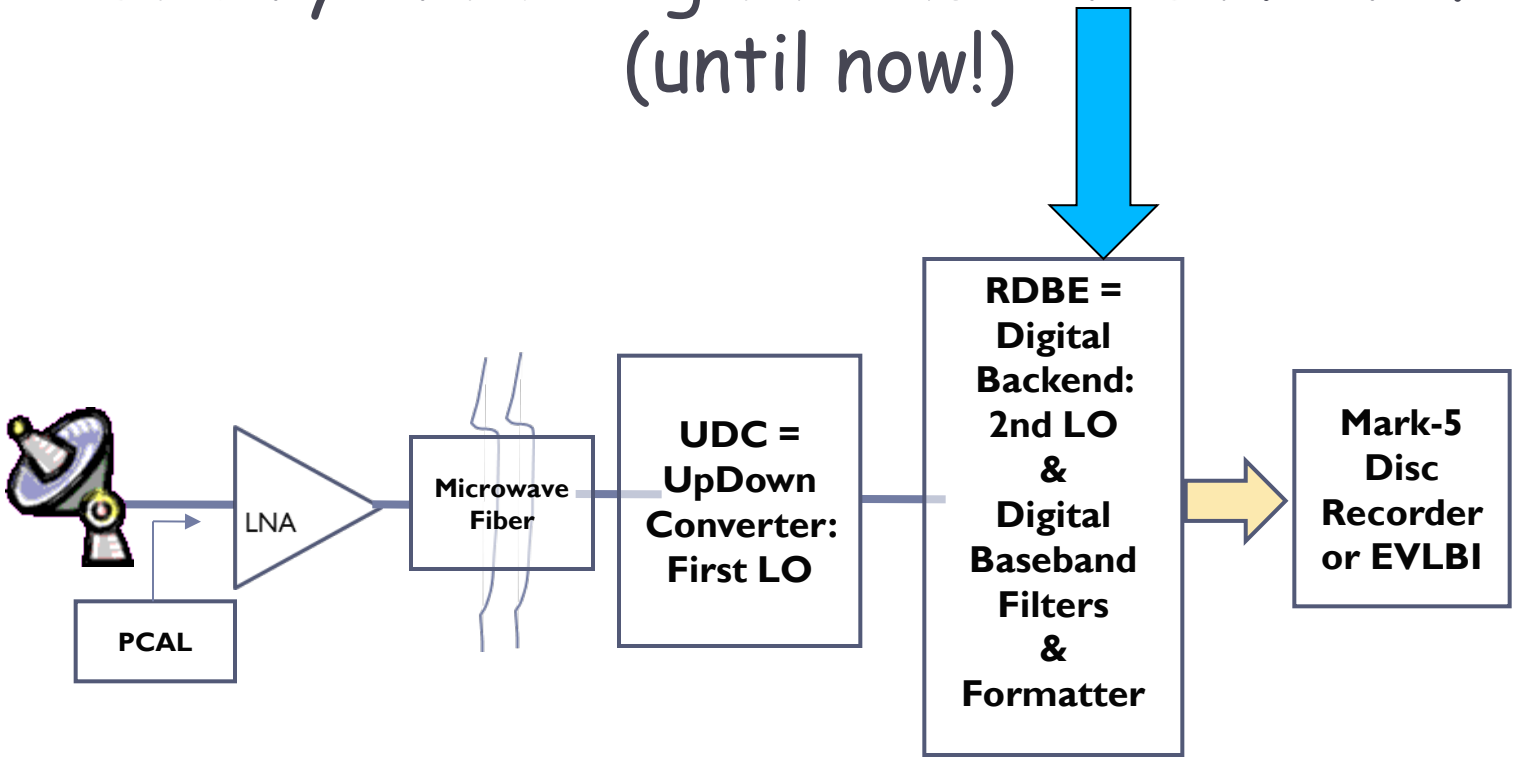

The current Haystack RDBE Firmware now provides a digital monitor output:

(thanks to Russ McWhirter)

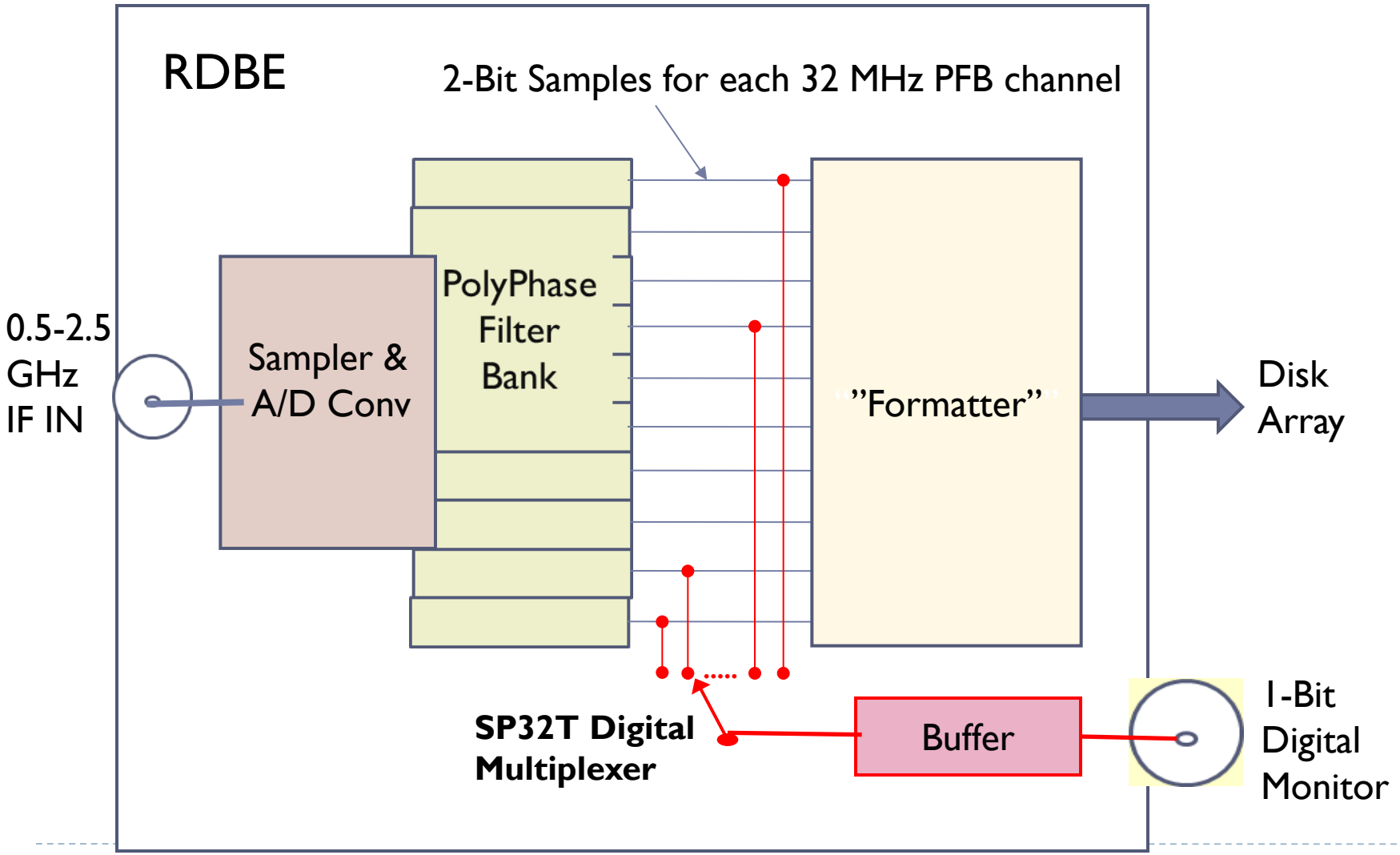

Does it work to throw away all the amplitude information and just use the Sign Bit ?

The answer is yes!

- For a "weak" signal, the S/N is degraded by a factor of $\pi/2$ = 1.57 $\approx$ 2dB.
  - This is known as the van Vleck correction
  - The use of one-bit sampled data has been very common in Radio Astronomy

- For a strong signal, any amplitude modulation on the signal will be very distorted. An FM signal will sound perfectly normal (FM radios normally limit the signal).

Some Commercial SDRs: RF Space

RF Space (www.rfspace.com) in Atlanta GA makes several interesting SDR's:

- The $500 SDR-IQ (used in the previous example) covers the DC-30 MHz range with up to 192 kHz bandwidth. Interface is USB. This is competent small, cheap SDR that is a very useful piece of test equipment. However, it's internal clock is not easily lockable to the station's H-Maser 10MHz.

More from RF Space

- The new $2500 RF Space NetSDR (with option 0204) looks like a perfect VLBI Phase Cal monitor. It has internal clocks that can be locked to the H-Maser for fully coherent system monitoring. It interfaces via Ethernet on the station LAN. It supports bandwidths up to 2 MHz plus a lower resolution real-time display of the 0-40 MHz frequency range.

Samples of the SDR-IQ and NetSDR are available for inspection at this meeting. The NetSDR on display is viewing the Westford's Phase Cal

A NetSDR in action at Westford:

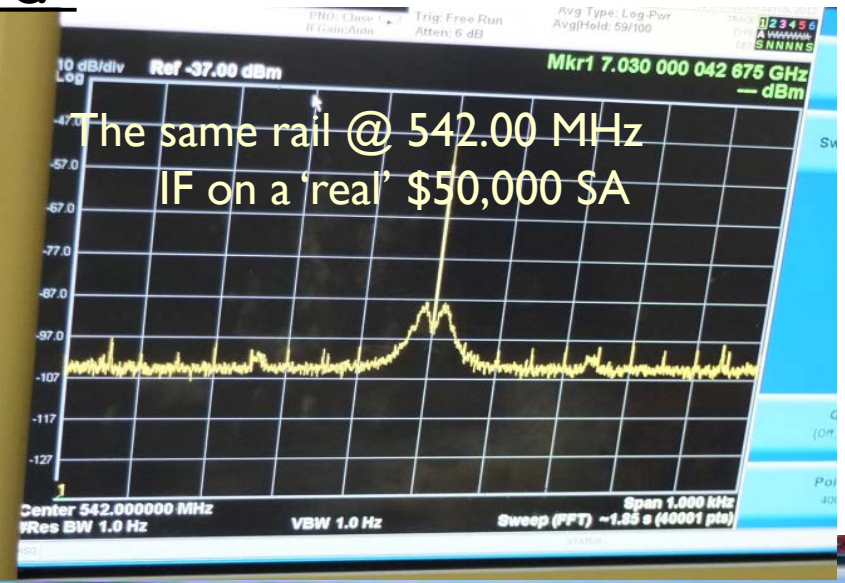

The same rail @ 542.00 MHz
IF on a 'real' $50,000 SA

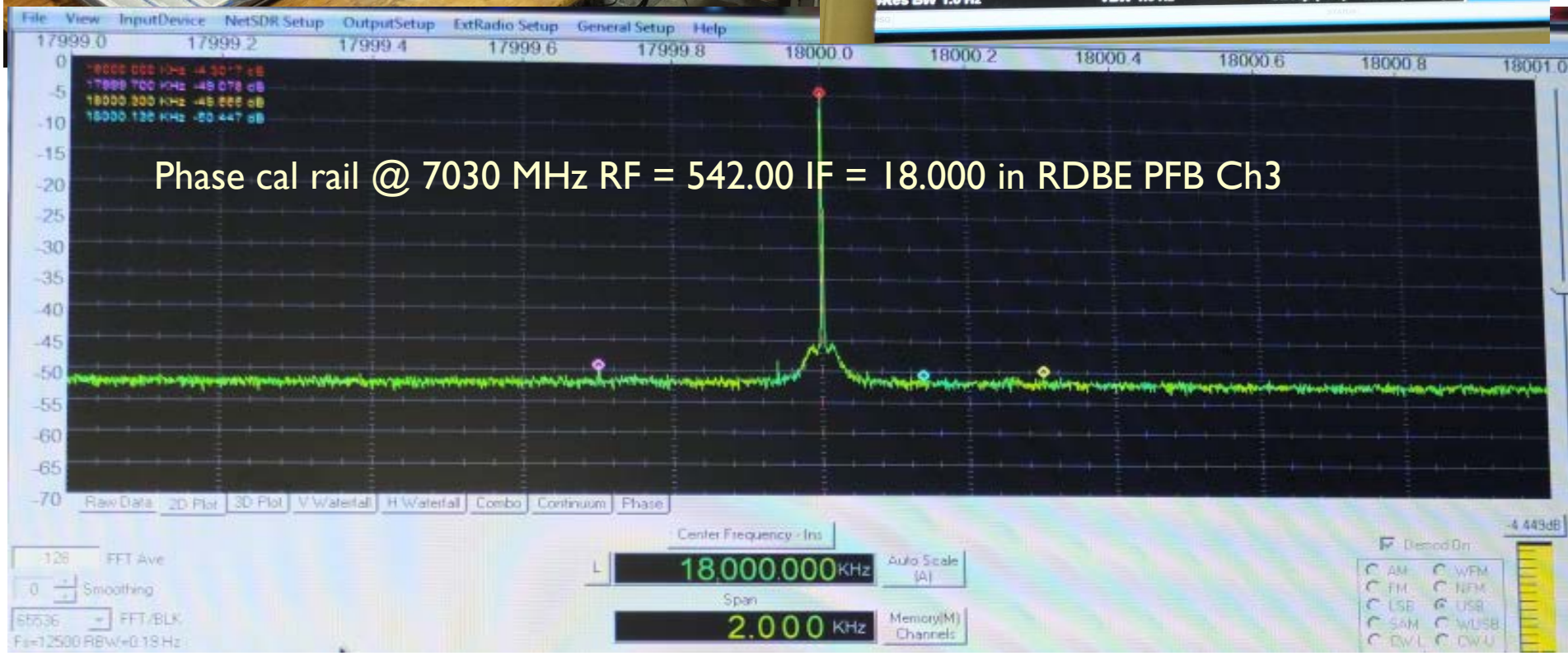

Phase cal rail @ 7030 MHz RF = 542.00 IF = 18.000 in RDBE PFB Ch3

A very interesting quasi-commercial SDR: HERMES

The amateur radio High Performance SDR (HPSDR) group has been doing open source (hardware and software) developments (see www.tapr.org & www.openhpsdr.org). Once a design is complete, it is made available to commercial firms to produce in quantity. The latest product of the HPSDR group (still in the Beta-test phase) is Hermes, the merge of a half-dozen earlier products onto a single 12x16 cm PCB. Some features of Hermes include:

- Uninterrupted coverage from 50kHz to 55MHz
- Supports Real-Time display of entire spectrum from 0-55MHz
- Supports 7 fully independent receivers (sharing the same input)
- 500mW transmitter, suitable as a 0-50 MHz VNA
- Built-in preamp, with a noise floor typically -135dBm in 500Hz
- Software-selectable 31dB input attenuator in 1dB steps
- FPGA code can be updated via the Ethernet connection
- Low phase noise (-140dBc/Hz @ 1kHz at 14MHz) 122.88MHz master clock,which can be phase-locked to an external 10MHz reference
- Command/Data interface from/to PC use 100Mb/Gb Ethernet
- Software in active "open-source" development with solid "Radio" base

More about Hermes:

As the HPSDR "hackers" complete the Hermes development, production has been arranged with Apache Labs (apache-labs.com) in INDIA. Apache is already taking orders for Hermes as a PCB ($900) and packaged in a nice box called the ANAN-10 ($1450)

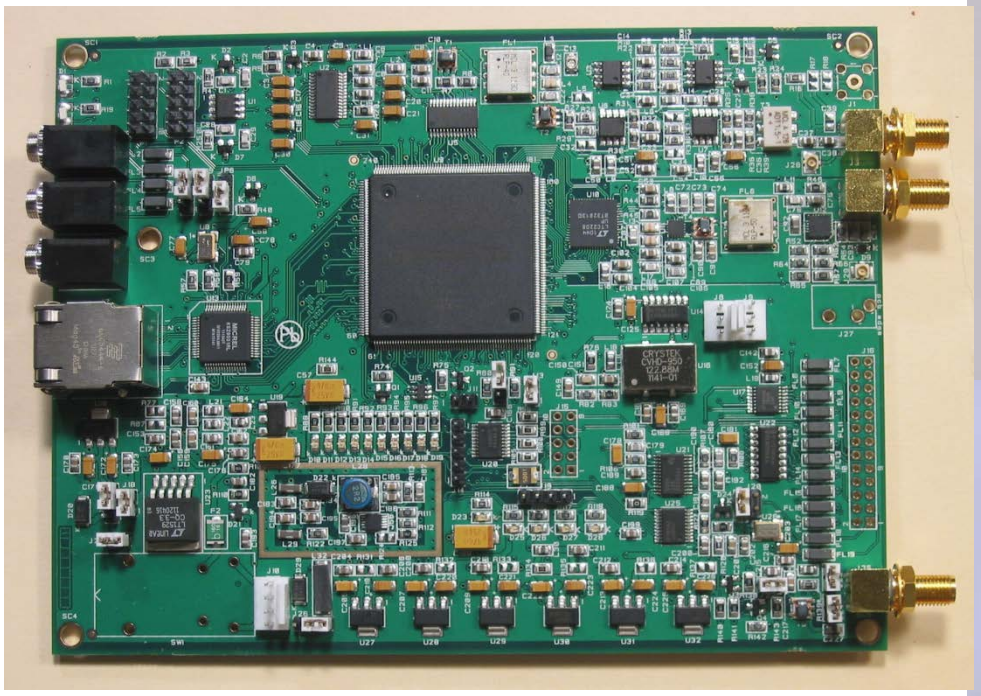

Some Other Commercial SDRs: SRL

The $800 "Quicksilver" QS1R (qs1r.wikispaces.com)

The QS1R from Software Radio Laboratory in Columbus OH shows much promise. It covers DC-62 MHz (or up to ~500 MHz when oversampled) with up to 2 MHz bandwidth. The QS1R interfaces to its PC by USB. The entire design and all its support software is "open" licensed.

Some Commercial SDRs: Flex Radio

Flex Radio (www.flex-radio.com) has been instrumental in introducing amateur radio to the SDR world. Most of Flex's efforts have been targeted towards full (receive + transmit) radios. Shown is their low-end Flex-1500, a $650 DC to 54 MHz SDR that can be locked to a phase-stable external frequency standard. Flex also makes a SDR system (www.flex-radio.com /Products.aspx?topic=CDRX-3200) for the surveillance community that might be adapted to VLBI's needs.

FUNcube Dongle

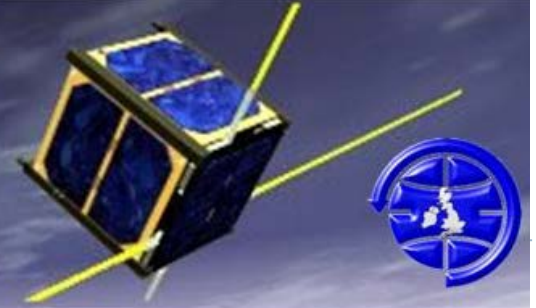

Home | The New FUNcube Dongle Pro+ | The Original FUNcube Dongle | Who's behind the FUNcube Dongle?

http://www.funcubedongle.com/

The FUNcube Dongle Pro+: LF to L band software-defined radio

Posted on November 9, 2010 by admin

Any mode, anywhere

No drivers required! *Device drivers are already included in your operating system - Windows, Linux or Mac OSX, 32 or 64 bit.*

Search

Specifications

- ☐ Frequency range 150kHz-240MHz and 420MHz-1.9GHz
- ☐ Sensitivity Typically 12dB SINAD NBFM for 0.15uV at 145MHz
- ☐ Reference oscillator 1.5ppm 26MHz
- ☐ Sampling rate 192kHz
- ☐ Bit depth 16 bits (32 bits used internally)
- ☐ PC interface USB 1.x Male A Full Speed (12Mbps)
- ☐ RF interface Standard SMA female (not Reverse Polarity [RP])

Item total	£124.99
Shipping and handling:	£9.42
	Total £134.41 GBP

Other Dongles ----- DVB TV:

- Cheap: Cost ~$10 - $40 on Ebay
- Frequency Range: 65 MHz – 1.9 GHz
- Software Support from public domain, including http://gnuradio.org
- Relatively poor LO Stability (by VLBI standards)
- Fun toys, good learning experience

Paul Boven (Westerbork) provided this sample of Pulsar signals observed with a DVB-TV Dongle:

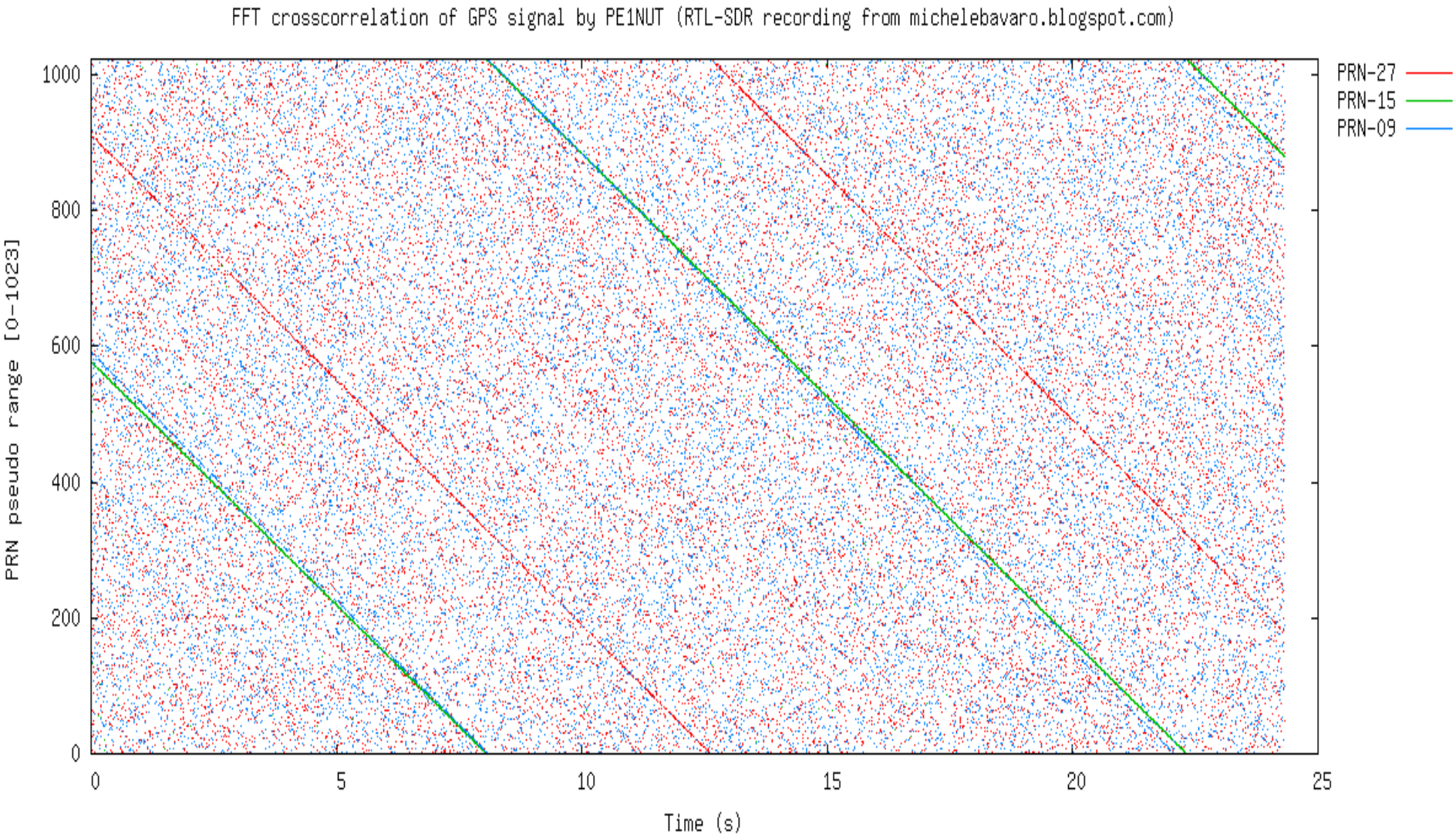

Non-commercial SDR that may be relevant

The GNU Radio (gnuradio.org/redmine/wiki/gnuradio) project represents a major professional grade open-source collaborative effort from a number of sources.

All the GNU software is supported on the USRP hardware available from Matt Ettus (www.ettus.com).

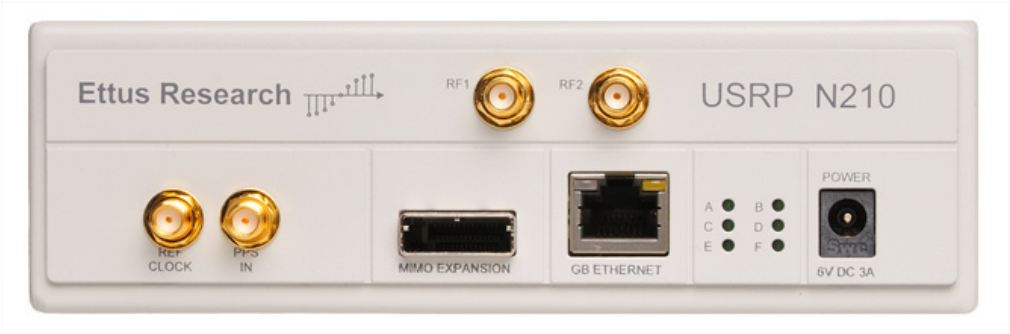

FYI – Ettus was recently acquired by National Instruments and I anticipate NI will be making a splash in the SDR world soon.