VLBI Software Correlator at the Interferometric Tracking Center of the China Deep Space Network

Songtao Han[1,2], Geshi Tang[1,2], Lue Chen[1,2], Jianfeng Cao[1,2], Tianpeng Ren[1,2], Mei Wang[1,2]

Abstract With the development of computer techniques, the VLBI software correlator is more and more popular. This article presents the development and performance of the software correlator used in the Interferometric Tracking Center. The software correlator has the ability of VLBI data processing both for spacecraft navigation and VLBI geodesy. Also, the data formats of VSR (VLBI Science Receiver) and VSI (VLBI Standard Interface) are accommodated. The correlator is written modularly in the C programming language and operated by shell script. The complex vector mathematics of the IPP (Intel Integrated Performance Primitive) library is induced because the efficiency of computing can be improved greatly. Parallel algorithm processing is adopted in the software. We present the results of the multi-agency VLBI experiment conducted with the ESA Spacecraft Venus Express in May 2013 and the Chinese Chang'e-3 lunar navigation in December 2013, which verifies the performance of the software correlator.

Keywords VLBI, software correlator, VSI, VSR

1 Introduction

In 2013, China Deep Space Stations JMS and KSH were deployed. At the same time the Interferometric Tracking Center of China Deep Space Network was founded in the Beijing Aerospace Control Center. The center takes the responsibility of organization tracking, making schedules, receiving raw VLBI data, monitoring the interferometric tracking system status, data processing, and so on. This paper focuses on the software correlator developed in BACC, which is named BSCS (BACC Software correlator system).

Fig. 1 Interferometric Tracking Center of the China DSN.

2 Software Development

The software correlator has a short history. With the pace of China DSN construction, the first generation software correlator was developed using Matlab, which is a convenient programming language for development, debugging, and graphical display. The second version was developed with the C programming language, with the basic complex structure and complex mathematics including an FFT developed by ourselves. The software runs in a multiprocessor shared-memory machine. To meet spacecraft navigation with a heavy data rate, the third version was developed under the ba-

1. National Key Laboratory of Science and Technology on Aerospace Flight Dynamics
2. Beijing Aerospace Control Center

sic principle from DiFX. The parallel algorithm processing is adopted in the software. The correlator is designed to run in Beowulf clusters of commodity machines. The parallel algorithm processing is adopted in the software. Then, two strategies are adopted: first, the correlator is designed to run in clusters combined with high performance computers, and the data streams of all the stations are distributed to each core computer according to the time stamp of the data. Second, each computer makes use of a number of threads to maximize performance. The core nodes make use of an allocatable number of threads to maximize performance on a heterogeneous cluster. The structure of the correlator system is shown in Figure 2. The manager node

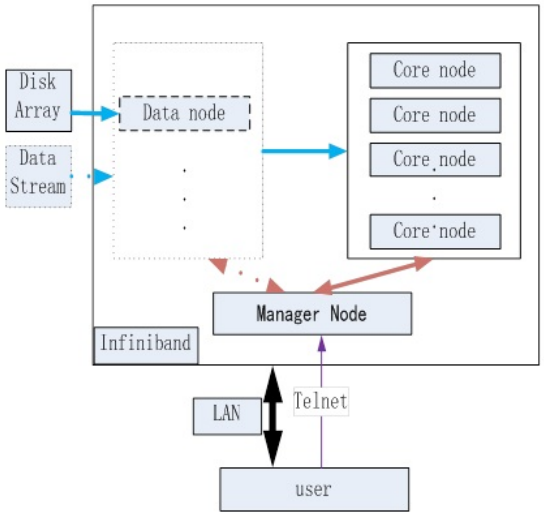

Fig. 2 Structure of the correlator system.

also performs cross multiplication and long-term accumulation, outputs the observable, and auto-crosses the spectrum, fringes, and logs. The core nodes take the key processing of the algorithm, including fringe rotation compensation, conversion to frequency-series, and fractional sample compensation. The cores act as short-term accumulators (STAs). These days, data stored in the disk is processed off-line, and the interface is preserved for real-time processing in the future. Data stream transfer within the cluster is handled via the Message Passing Interface standard. Local data storage consists of RAIDs with a total capacity of 100 TB. All the nodes are interconnected through a 20 Gbps InfiniBand. The control terminal and processing cluster are connected via a LAN. A trained operator signed in the manager node through telnet runs the software via shell script. Progress and running status information can be displayed in the shell window. Three files are necessary to run the correlator. The first is a MACHINES file, which contains all of the compute nodes in the cluster. Usually the file is unchanged unless any PC server is added or eliminated from the cluster. The second file is the run nodes file, which lists the necessary nodes on which the program will run. All the information used for data processing is listed in the configuration file. Data formats with protocol RDEF (Raw Data Exchange Format) and VSI (VLBI Standard Interface) are accommodated. These days, the output of the correlator is according to the OD system in BACC. The recording parameters include the sample rate, the quantization bit, and the number of channels. The correlator uses clock models in the form of a single clock offset and linear rate as a function of time per antenna. The delay model used for correlation is supplied by the OD group, in the form of high-order polynomials for each antenna.

3 Performance

After the deep space stations were deployed, the first multi-agency Delta-DOR experiment was conducted with the ESA spacecraft Venus Express in May 2013. One of the aims of this experiment is to verify the ability and the accuracy of the correlator. A total of eight stations participated in this co-operative observing, including SH/BJ/KM/UR of the CVN, KSH/JMS of the CDSN, and CEB/NNO of the ESA. We focused on the accuracy of the software correlator and the consistency of the observable values from the correlator, and ESOC indicates that an internal RMS accuracy of 0.2 ns was achieved. We can find that for quasar observations, the result has better consistency than for spacecraft observations. For scans 1, 3, 4, and 6, the consistency was on the order of 10 picoseconds, but for scans 2 and 5, on the order of 100 picoseconds. The differences may exist in the delay models used. The second important implication of the BACC Software Correlator System is for the China CE-3 project. All types of tracking raw data are transferred to BACC and processed with our correlator within 24 hours. Observables were used for high accuracy orbit determina-

Table 1 Comparison between BACC and ESOC.

Target	UTC	ESOC(ns)	BACC(ns)	Difference
0507+179	07:48:33	-4180977.909	-4180977.896	0.013ns
VEX	07:59:03	-91922.845	-91922.630	0.215ns
0507+179	08:10:33	-1636282.394	-1636282.428	0.036ns
0507+179	08:19:32	-569384.990	-569385.004	0.014ns
VEX	08:30:03	3451412.413	3451412.6590	0.246ns
0507+179	08:41:33	2089369.712	2089369.695	-0.017ns

tion including raw VLBI data, clock synchronization, and met data. These pictures show the interferometric fringes for quasar processing and CE-3 spacecraft. Observables include ranging, doppler tracking, delays and delay rates within the baselines of the CVN, and delays and delay rates within the baselines of the China DSN. All these observables are used for orbit determination. When we compared the observables within the China DSN with the high accuracy orbit, the residual delays were less than 1 ns, corresponding to a maximum angular error of tens of nanoradians with baseline length 4,350 km.

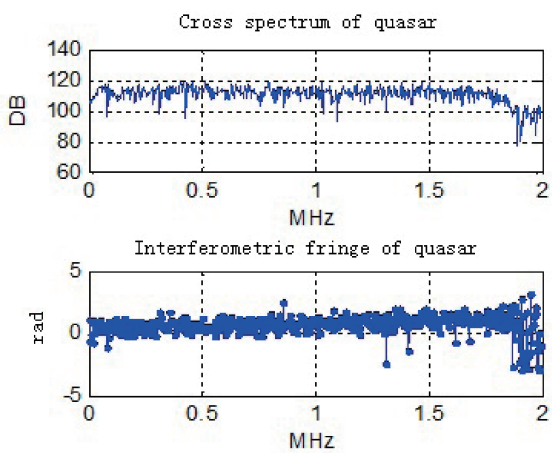

Fig. 3 Correlation results of quasar.

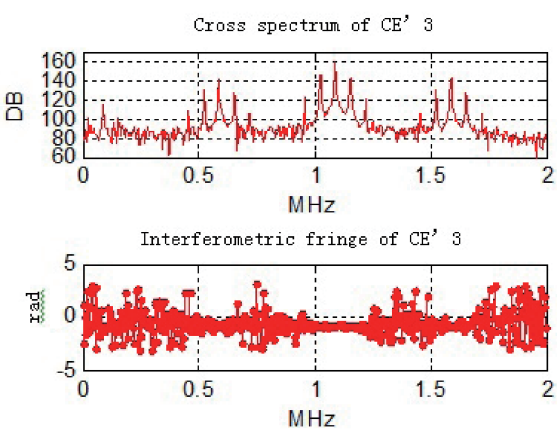

Fig. 4 Correlation results of CE-3.

Table 2 Accuracy statistics in the CE-3 project.

	Transfer orbit	Lunar orbit	After landing
Integration Time (s)	4.194304	4.194304	4.194304
Scan length (h)	5.3	13.2	0.7
Frequency	f1	f2	f2
Delay error (ns)	0.87	1.17	0.53
Delay rate error (ps/s)	0.90	0.77	0.37

4 Conclusions

As a new participant in the VLBI domain, we have successfully developed the software correlator and have successfully used it in VEX experiments and the China CE-3 project. In the future, packages of geometric delay modeling, station synchronization search, and propagation medium analysis will be integrated into the software correlator. Also we will improve the correlator system efficiency, extend the correlation cluster, and expand the output for different applications.

References

1. Deller, A. T., Tingay S. J., Bailes M., et al. DiFX: a software correlator for very long baseline interferometry using multiprocessor computing environments *Publications of the Astronomical Society of the Pacific*, 119(853), pages 318-336, 2007.
2. Kondo T., Kimura M., Koyama Y., et al. Current Status of Software Correlators Developed at Kashima Space Research Center*IVS 2004 General Meeting Proceedings* pages 186-190, NASA/CP-2004-212255, 2004.
3. Deller A. T., Brisken W. F., Phillips C. J., et al. DiFX-2: a more flexible, efficient, robust, and powerful software correlator*Publications of the Astronomical Society of the Pacific*, 123(901), pages 275-287, 2011.
4. Tingay S. J., Alef W., Graham D., et al. Geodetic VLBI correlation in software *Journal of Geodesy*, 83(11), pages 1061-1069, 2009.